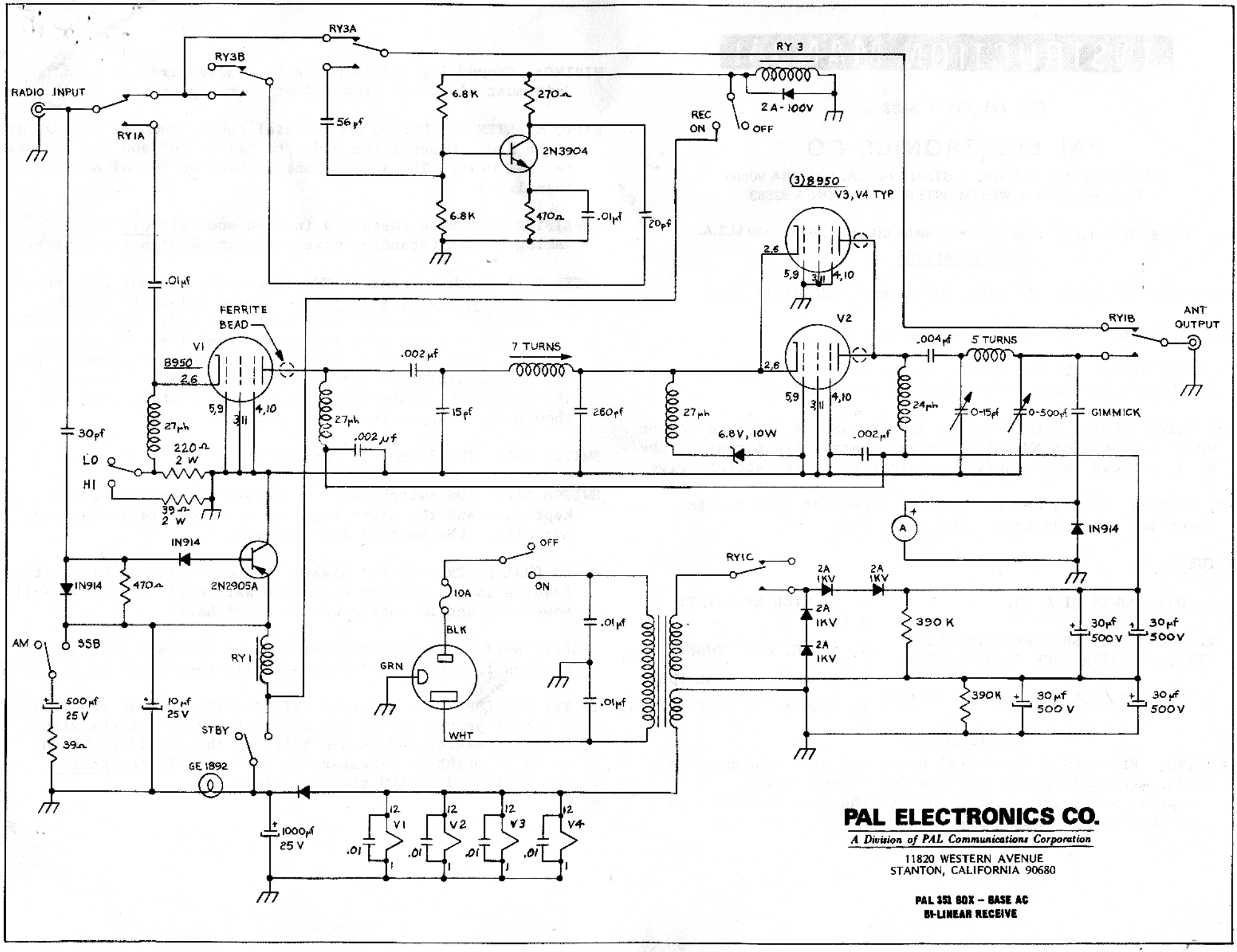

PAL ELECTRONICS CO.

A Division of PAL Communications Corporation

11820 WESTERN AVENUE
STANTON, CALIFORNIA 90680

PAL 351 BOX – BASE AC
BI-LINEAR RECEIVE